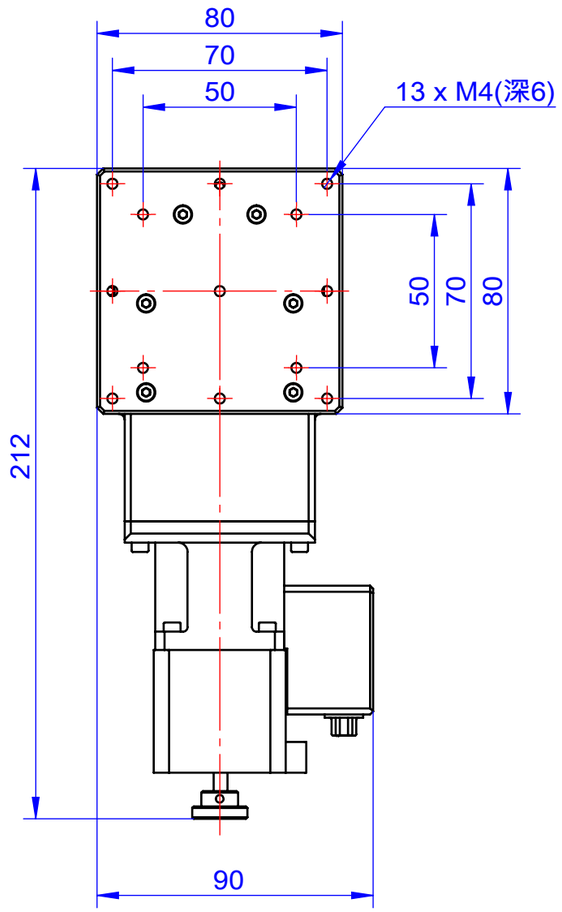
80
70
50
13 x M4(深6)
50
70
80
212
90

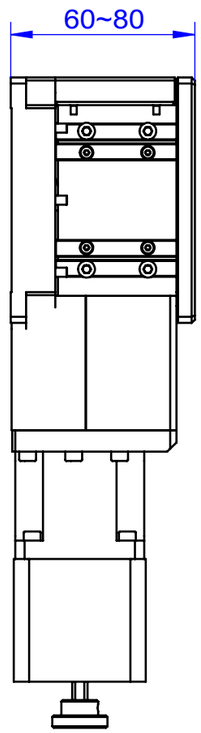
60~80

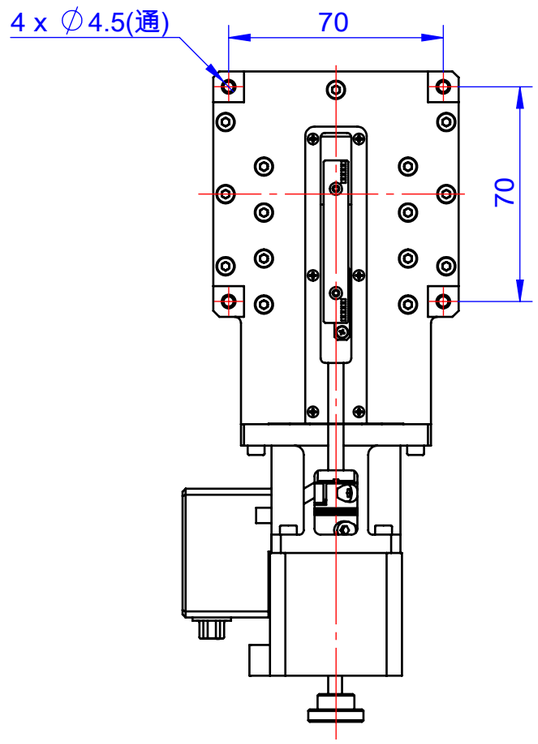
4 x ∅4.5(通)
70
70

